FEATURED ALUM-A-LIFT

MOBILE HEIGHT-ADJUSTABLE WORKSTATION WITH FORK SET

PROJECT 28115

MODEL A2500CSLR-84

FEATURING Fork set with Cart Mounting Holes, Leveling Pads, 110VAC Power Supply, Keyed On/Off Switch

HANDLING 1050 lb [476 kg] Cart

DETAILS This Alum-a-Lift was made to elevate an assembly cart to an ergonomic working height. The mobility of the lift allows for a flexible assembly area, while the leveling pads ensure a stable workstation. An AC power supply is incorporated in the lift, allowing "plug-in" operations and eliminating battery maintenance requirements.

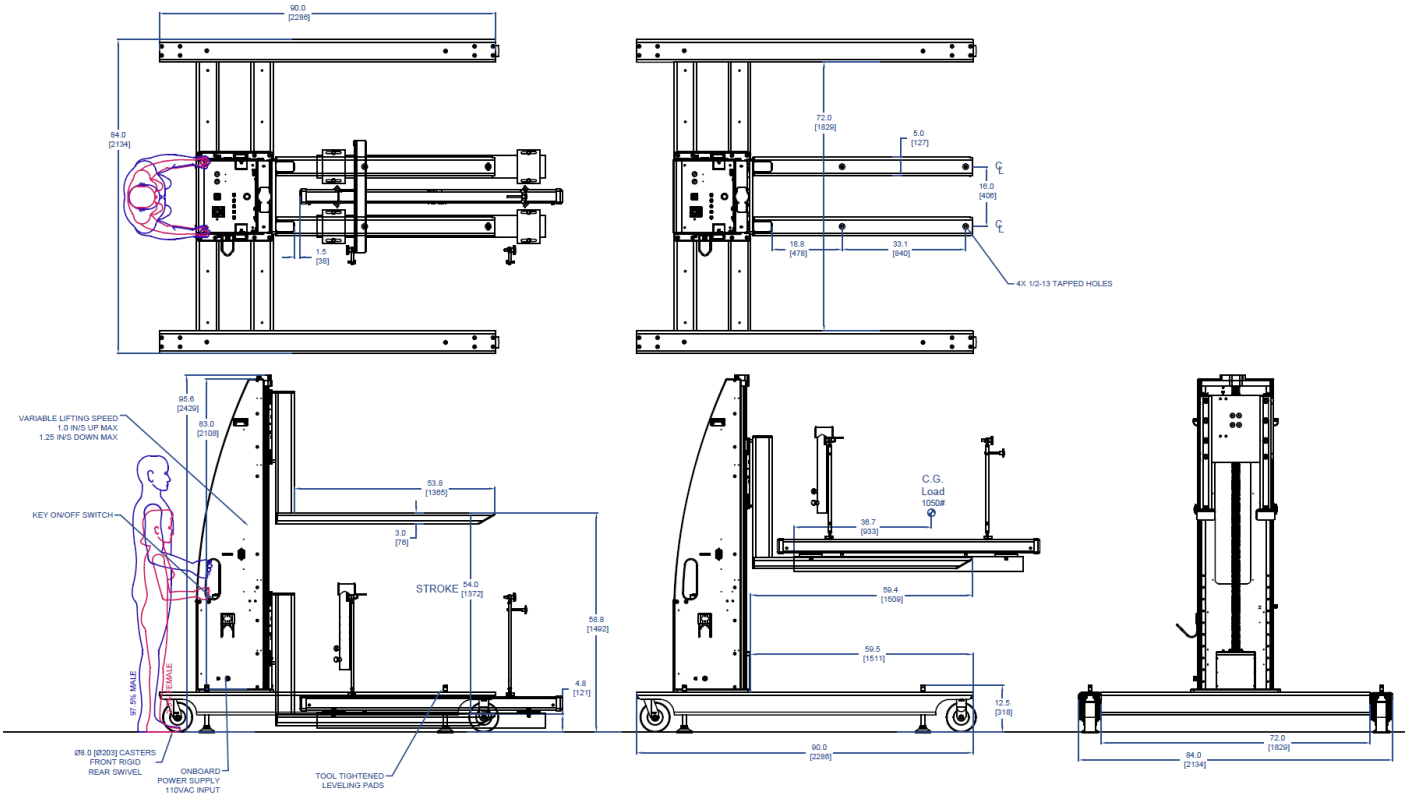

alum-a-lift
13941 Veterans Memorial Hwy
Winston, GA 30187 USA
+1 770 489 0328

GET STARTED AT **ALUM-A-LIFT.COM**